VASAL

1 X1x	2 X1x				
A X4x	B X4x	C X1x			

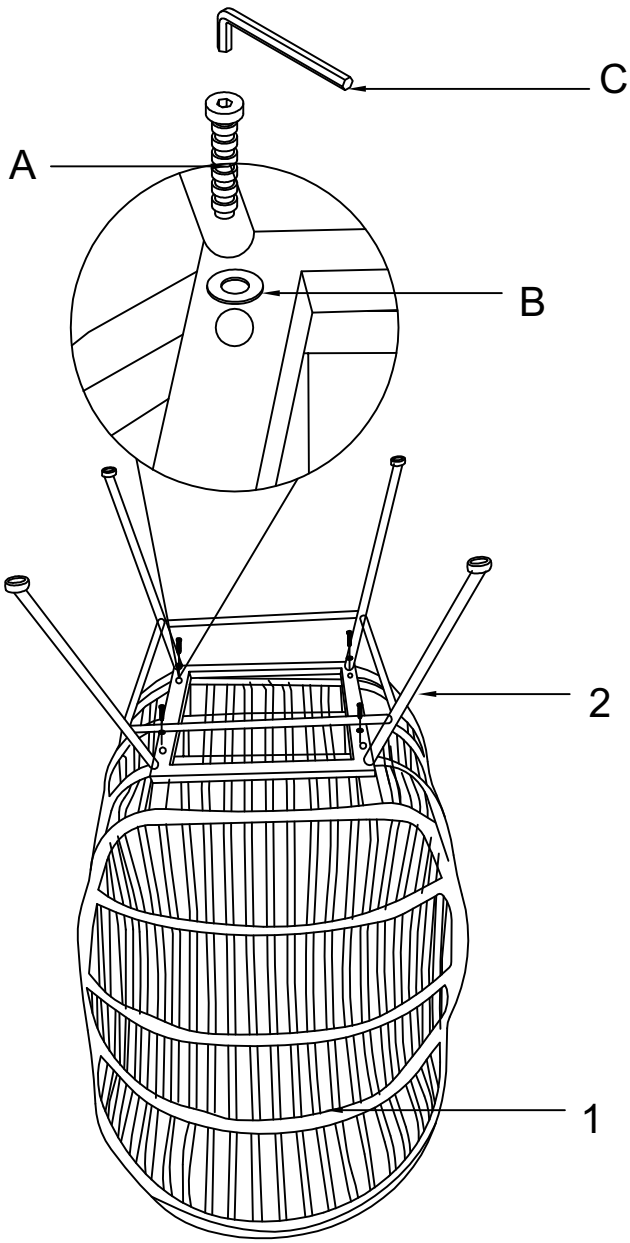

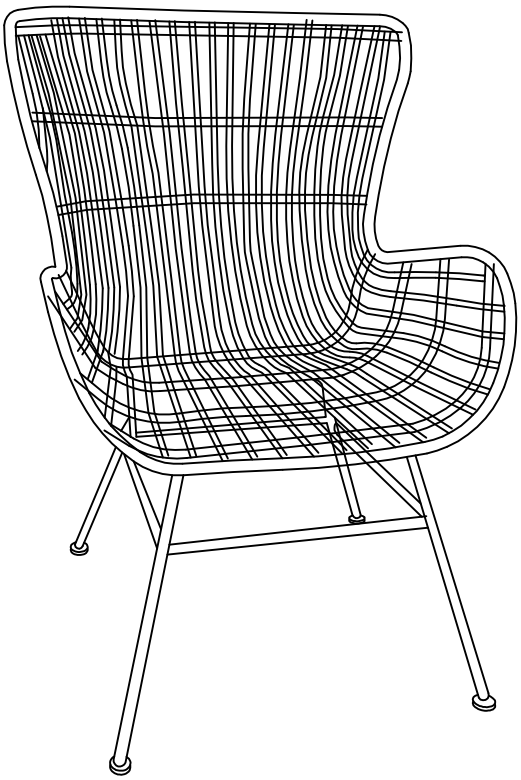

VASAL
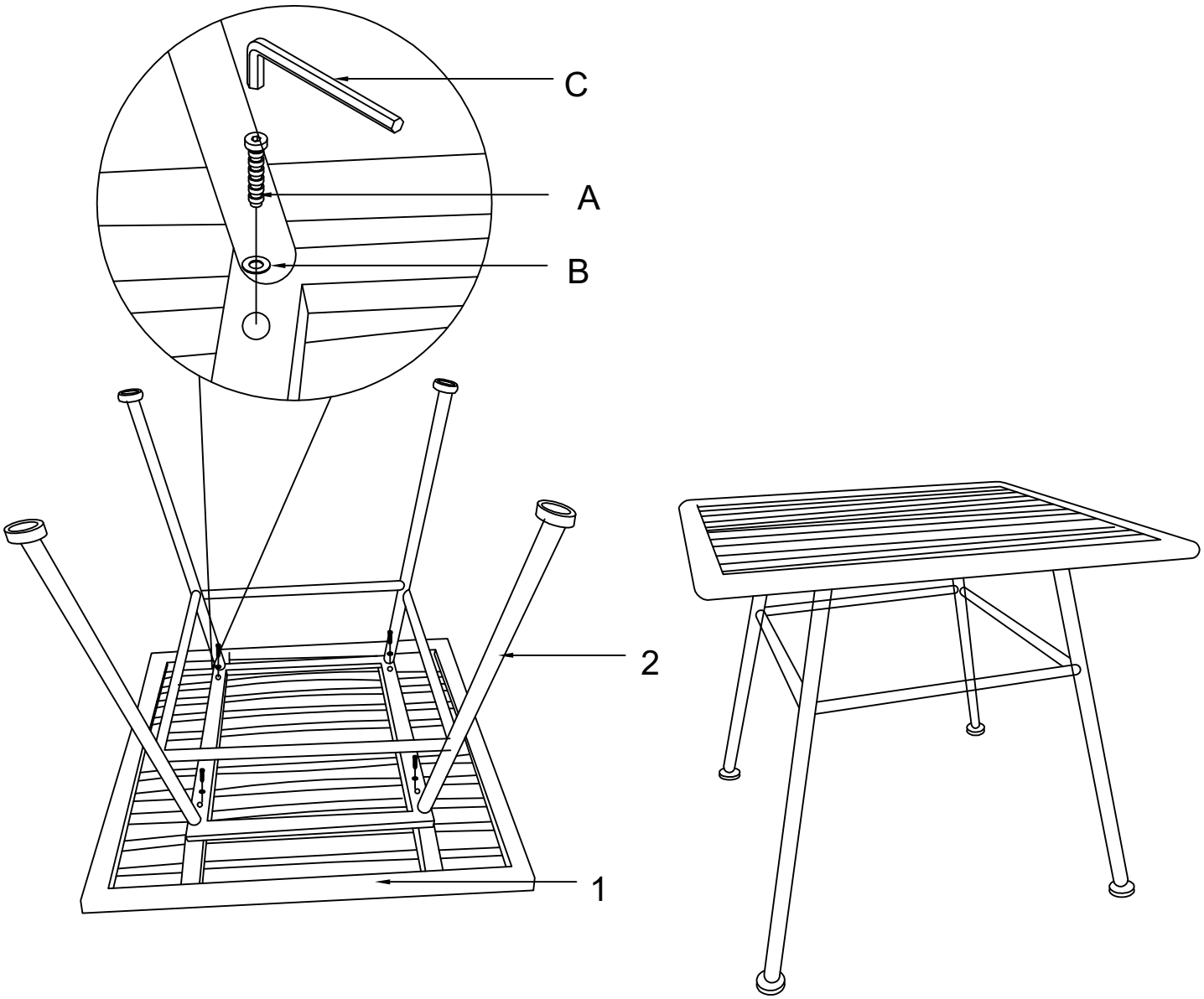
1 X1x	2 X1x				
A X4x	B X4x	C X1x